SMD®
Structural Floor and Roof Solutions
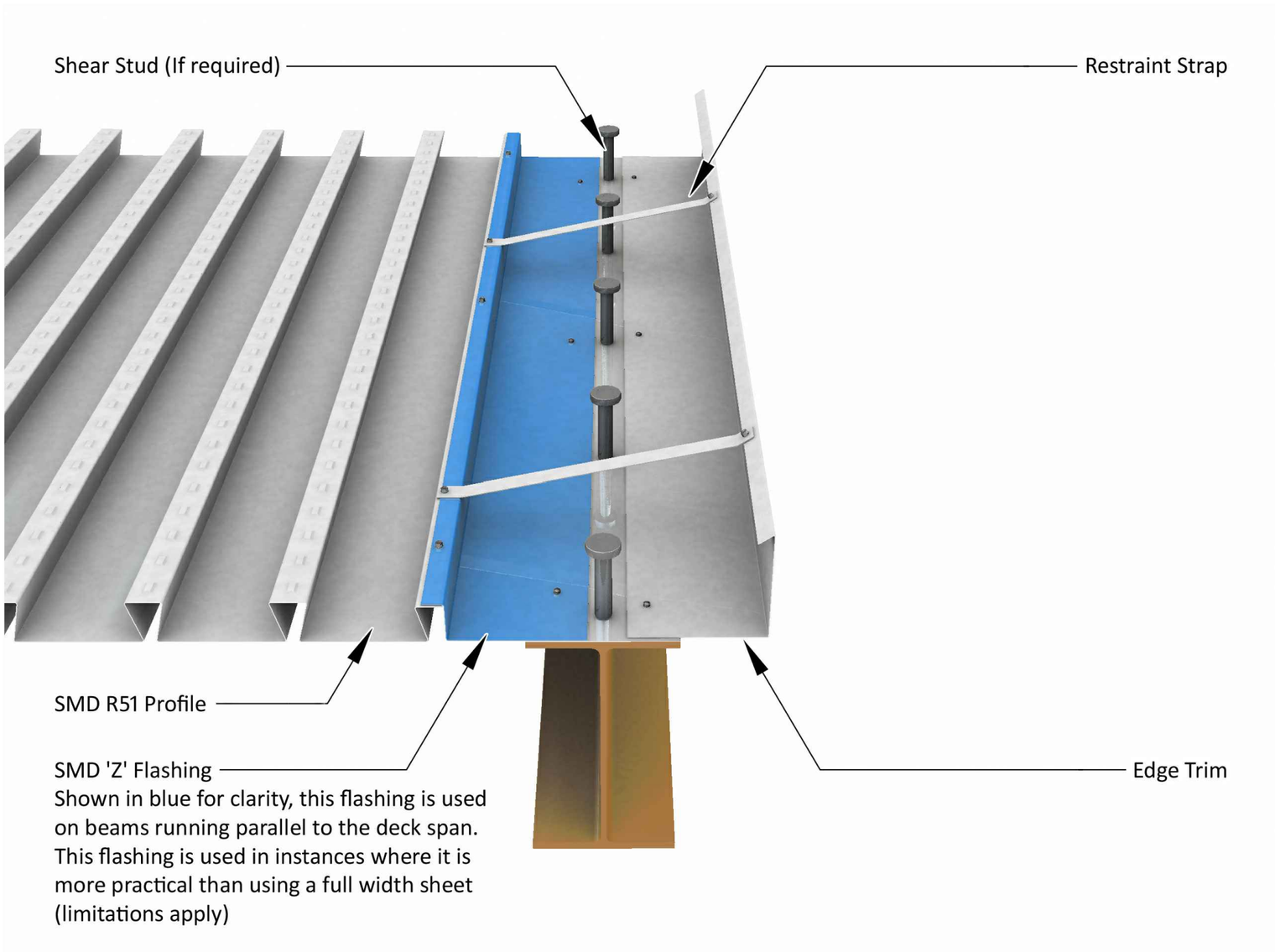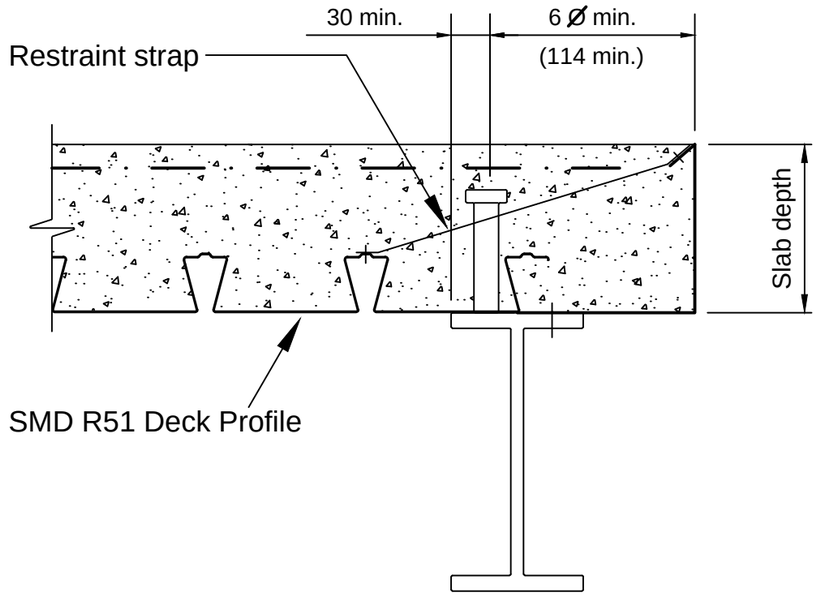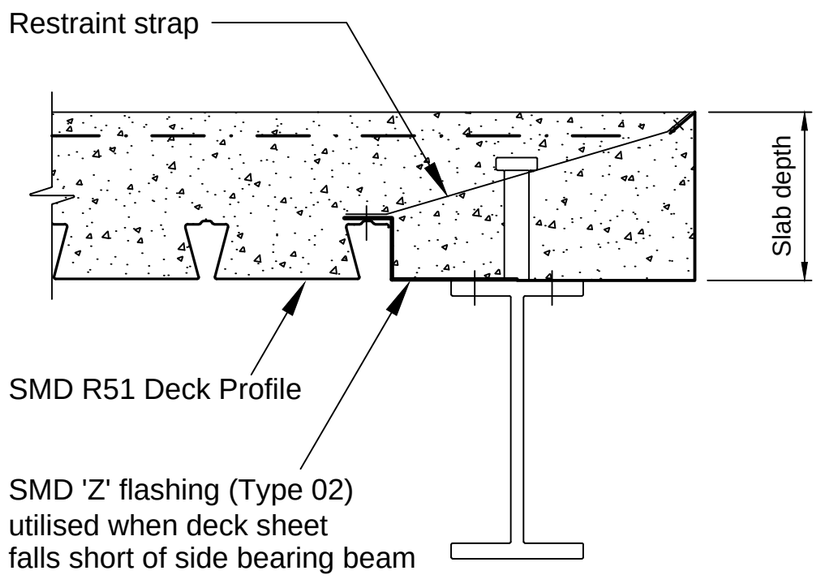
R51 slab edge and flashing's